Operating Manual

iCAM100

This page is intentionally left blank.

Document Number **302803** (See Last Page for Revision Details)

Contents

1 Introduction

The iCAM100 is designed for use in Hazardous areas where a method of surveillance is required and space is at a premium. It is also ideal for monitoring plant or areas which are difficult to view due to its compact size. The iCAM100's design means that it is suitable for use in both Zone 1 and Zone 2 environments.

Please read the **installation and operating instructions** from cover to cover before installing and commissioning the iCAM100. Only Qualified personnel that are authorised from the operating company should install the iCAM100 unit.

Validity of Operating and Programming Instructions

- Your Extronics agent will be able to give you information about any improvements or modifications.
- If the iCAM100 is damaged by inappropriate use, the manufacturer will not guarantee the product.

Operational Safety

- The iCAM100 Module is assembled on our ISO 9000 accredited premises and therefore conforms to the appropriate requirements.
- The front of the actual camera housing is protected to IP 66. The termination enclosure is rated to IP 65.
- If the iCAM100 is not used in a manner for which it is design or if it is not installed as directed, there will be a certain level of risk involved for which Extronics Ltd will not be responsible.

Repairs, Dangerous Chemicals

A note describing the fault must always accompany equipment sent to Extronics Ltd for repair.

Important!	**The following procedures must be carried out before the iCAM module is returned for repair:**

- Remove all residues that may be present. Pay special attention to the gasket grooves and crevices where residue may collect.
- Please ensure that full precautions have been taken to remove all traces of substances that may represent a health risk before returning any equipment.
  Costs of disposal of materials or of injury to personnel (acid burns etc.) arising because of defective cleaning of the equipment will be charged to the owner of the equipment.

2 Safety Information and Notes

2.1 Storage of this Manual

Keep this user manual safe and in the vicinity of the device. All persons who have to work on or with the device should be advised on where the manual is stored.

2.2 List of Notes

The notes supplied in this chapter provide information on the following.

- Danger / Warning.
  - Possible hazard to life or health.
- Caution
  - Possible damage to property.
- Important
  - Possible damage to enclosure, device or associated equipment.
- Information
  - Notes on the optimum use of the device

Warning!	**The unit is not to be opened if the immediate area around the came is classed as explosive.**

Warning!	**Work on electrically live parts, except for intrinsically safe circuits, is prohibited on the principle that they're danger of explosion.**

Important	**Changes to the design and modifications to the equipment are not permitted.**

Important	**Before setting the unit to work, read the technical documentation carefully. Only the latest version is valid.**

Important	**Installation, maintenance and cleaning of the units must only be performed by persons trained and authorized for this purpose.**

Important	**If it can be assumed that safe operation is no longer possible, switch off the unit and secure it against being used again.**

Important	**After de-energising, delay 1 minute before opening**

2.3 Gland Special Conditions

Important	**The Gland is only suitable in the temperature range of -60℃ to +80℃**

Important	**When the gland is used for increased safety or dust protection, the entry thread shall be suitably sealed to maintain the ingress protection rating of the associated enclosure**

Important	**When used with unarmoured or braided cable, the gland is only suitable for fixed installations, the cable for which must be effectively clamped to prevent pulling and twisting**

2.4 Camera Module Special Conditions

Important	**The free end of the permanently connected cable shall be protected in accordance with EN50014:1997 clause 14.1.**

Important	**In accordance with EN 50018:2000 clause 13.4.2 the rear end of bushing shall be protected by fitting it into a suitably certified enclosure. In addition, the bushing must not be subject to torque during installation.**

Improtant	**The product shall not be connected to portable equipment.**

Important	**The product that is fitted with a window has only been subjected to reduced risk impact tests in accordance with EN 50014:1997 clause 23.4.3.1; therefore it shall not be mounted in an area where there is a high risk of impact.**

Important	**The product shall be earthed in accordance with EN 50014:1997 clause 15 when fitted to a suitably certified enclosure**

3 Installation & Setting To-Work

The iCAM100 is very simple to install and can either be secure directly to suitable surface using the mounting holes on the module, or using the included wall bracket

3.1 Wiring

Remove the iCAM100 lid by undoing the four screws (being careful not to loose the washers).

Inside you will find a terminal block with four wires going to the camera unit, one twisted pair for power to the camera & one twisted pair for the video signal.

Using a suitable cable feed through the gland connect the wires to the terminal block as shown in the diagram.

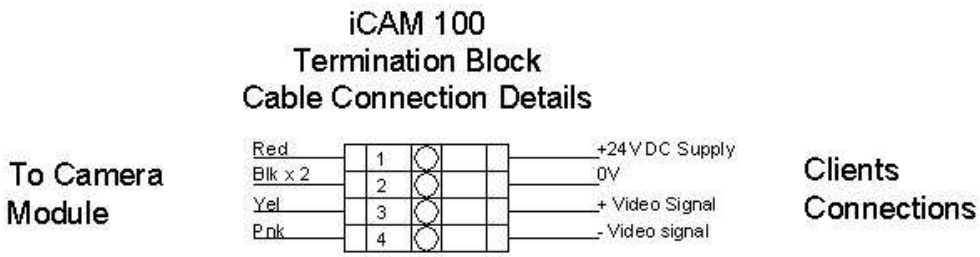

Note:	**For 3 wire Camera Modules the Black wire is common for both the 0V Supply and the –Video Signal**
	Yellow & Black for composite output **Pink & Yellow for Differential output** **Earth terminal for incoming earth on some models**

Once the terminal wires have been connected, tighten the gland and replace the lid accordingly.

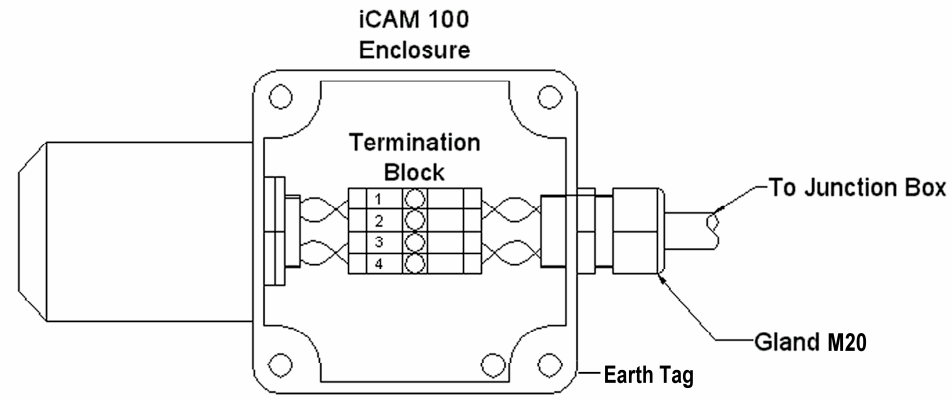

Important	**Ensure the correct Cable and Cable Gland are used and that the unit is suitably earthed for your particular application**

Caution	**Check wiring before switching on.**

3.2 Mounting the Camera using the Wall Bracket

Using the template supplied with each bracket, drill 3 x 7 mm Diameter holes each 45mm deep and clean out the holes.

Insert one raw plug into each hole

Pass a screw through each hole in the bracket and into the raw plug. Tighten all screws firmly.

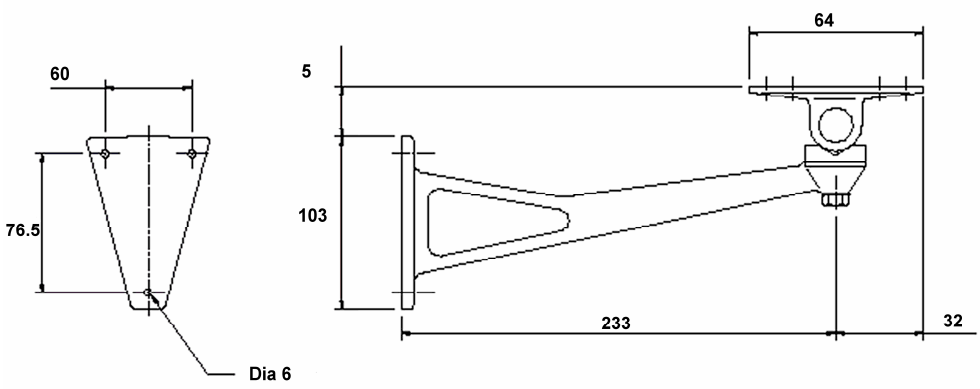

Attach the mounting plate to the iCAM100 module using the bolts and washers supplied

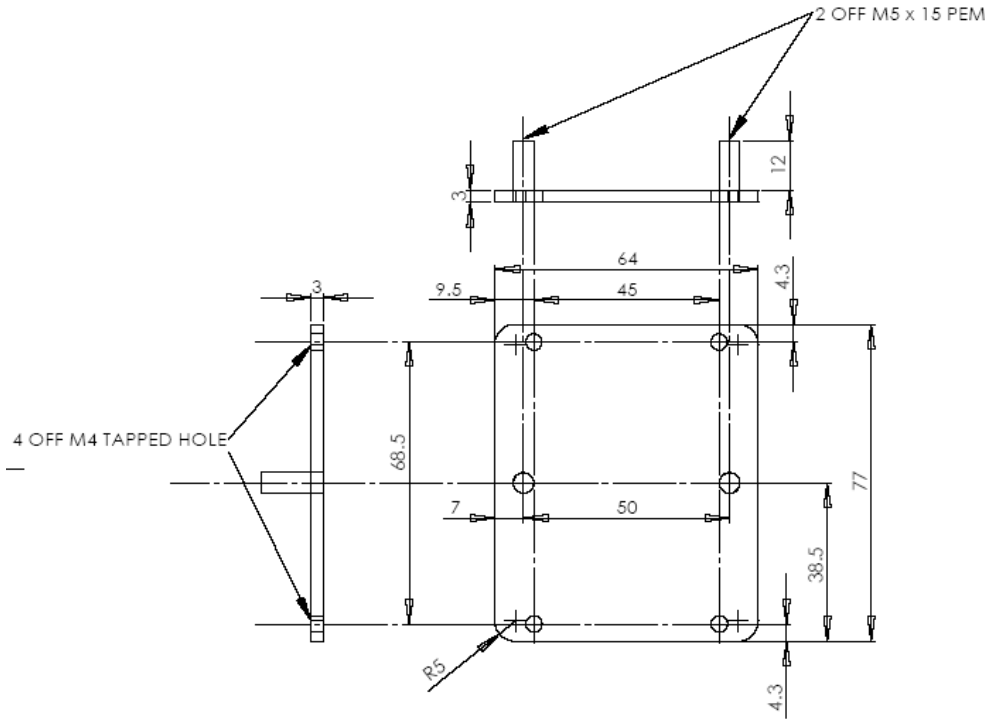

Then attach the plate to the Wall bracket, and tighten all nuts firmly.

3.3 Pan and Tilt Adjustment

To adjust the pan and tilt loosen the nut and bolt on the underside of the bracket, angle the camera to the required position and tighten the nut and bolt accordingly.

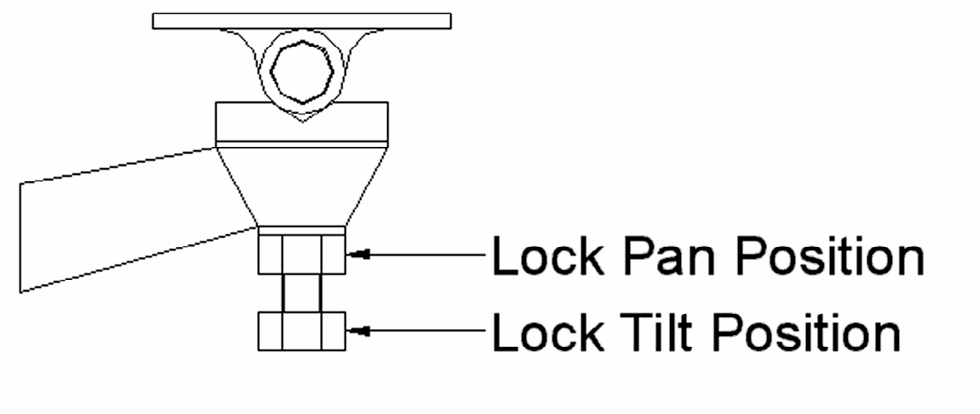

3.4 Mounting the Camera Directly

The iCAM enclosure has four mounting holes located on its underside, which can be used to mount the camera directly or to the mounting plate for use with the wall bracket.

4 Operation

Once the iCAM100 is wired up all the unit requires is power and a suitable monitor to view the picture. There are no other adjustments on the camera itself apart from pointing the camera in the required direction using the pan and tilt.

The iCAM100 does not require manual focusing, however it should be remembered that the optimal focal distance is dependent upon the lens used for the field of view.

The primary function of the camera is to provide video surveillance monitoring in classified hazardous areas, such as Zone 1. This is achieved by housing the camera electronics in an ATEX certified enclosure.

When power is applied to the camera it turns ON and immediately begins video transmission.

4.1 CCTV Colour Camera

The CCTV camera is a self-contained unit with integrated fixed focal length optical lens, imaging sensor, automatic IRIS and video image generator.

4.1.1 Power Supply Unit

The power supply converts a nominal 24Vdc into two voltage supplies (+/-9Vdc) used internally to energise the CCTV Colour Camera and Video Line Driver; all supplies have a common ground (GND) connection.

4.1.2 Video Line Driver

The video line driver converts the 1V composite video output from the CCTV Camera into a 2V differential composite video signal (balanced line) suitable for transmission over either a 75R coaxial cable or 150R twisted pair cable.

5 Intended Purpose Usage

Important	**Before setting the units to work, read the technical documentation carefully.**

Important	**The latest version of the technical documentation or the corresponding technical supplements is valid in each case.**

The iCAM100 is built using modern components and is extremely reliable in operation; however it must only be used for its intended purpose. Please note that the intended purpose also includes compliance with the instructions issued by the manufacturer for installation, setting up and service.
Any other use is regarded as conflicting with the intended purpose. The manufacturer is not liable for any subsequent damage resulting from such inadmissible use. The user bears the sole risk in such cases.

5.1 Transportation and Storage

All iCAM100 devices must be so transported and stored that they are not subjected to any excessive mechanical stresses.

5.2 Authorized Persons

Only persons trained for the purpose are authorized to handle the iCAM100; they must be familiar with the unit and must be aware of the regulation and provisions required for explosion protection as well as the relevant accident prevention regulations.

5.3 Cleaning and Maintenance

The iCAM100 and all its components require no maintenance and are self-monitoring. All work on the iCAM100 by personnel who are not expressly qualified for such activities will cause the Ex approval and the guarantee to become void.

5.4 Safety Precautions

Important	**For the installation, maintenance and cleaning of the units, it is absolutely necessary to observe the applicable regulations and provisions concerned with explosion protection (EN 50014, EN 60079-14:2003) as well as the Accident Prevention Regulations.**

5.5 Cleaning and Maintenance Intervals

The cleaning intervals depend on the environment where the system is installed.

5.6 Aggressive substances and environments

The iCAM100 is not designed to come into contact with aggressive substances or environments, please be aware that additional protection may be required.

5.7 Exposure to external stresses

The iCAM100 is not designed to be subjected to excessive stresses e.g. vibration, heat, impact. Additional protection is required to protect against these external stresses.

The iCAM100 will require additional protection if it is installed in a location where it may be subjected to damage.

6 Technical Data

Power Supply	19 to 32 V dc 1.2 W ,reverse polarity protected. 36 V over voltage protection
Electrical Connection	Screw terminals for cables up to 2.5mm
Outputs	PAL composite video
Entries	1 x M20 for suitable Ex e glands
Weight	650 g
Mounting	Universal wall mounting bracket with 360 degree horizontal pan and 70 degree vertical tilt
Field of View	Range 10 to 150 Degrees. See ordering information for further details
Light Sensitivity	0.5 Lux @ F2 5600K
Resolution	Picture Element (Pixels) N:290K P:320K, Horizontal res 380 lines
Material	Camera 316L stainless steel, Junction Box GRP
Dimensions	Camera 50mm x 80mm (Dia x l), Junction Box 80mm x 55mm x 75mm (w x h x d)
Ambient Temperature	-20℃ to +50℃
IP Rating	IP55
Certification Type	II 2G EEx de IIC T6
Certification Number	Sira 02ATEX1271X

6.1 Field of View

Angle of View	Focal Length	Recognisable Distance	Best Picture Distance
19°	16.0mm	30M	12M
28°	12.0mm	16M	6M
40°	8.0mm	12M	4M
53°	6.0mm	8M	2.3M
80°	4.0mm	6M	2M
92°	3.6mm	4M	1.8M
130°	2.97mm	3.5M	1.5M

6.2 Power Supply Input

Supply Specification	Units	Min	Max
Supply Voltage Range	V	19	32
Absolute Voltage Limits	V	14	36
Supply Power Consumption	mW	--	1200

6.3 Video Signal Output

Video Signal Specification	Units	Min	Max
Coaxial Composite Signal	Vpp	1	Composite into 75R
Differential Twisted Pair	Vpp	2	Composite into 150R (Alternative output iCAM100-[#1]-D-[#3])
Typical distance (PSU/cable dependant)	M	500	

6.4 CCTV Camera Module Mechanical Details

Housing Specification	Units	Min	Max
Operating Temperature Range	C	-20	+50
Operating Humidity Range	%RH	0	99 Non condensing
Storage Temperature	C	-20	+70
Storage Humidity Range	%RH	0	99 Non condensing

6.5 CCTV Camera Module Electrical Details

Video Sensor Specification	Units	Min	Max
Sensor type		Full Colour (PAL sensor)	
Video Signal (EU)	PAL	290 (H) x 320(V) 380 lines, 50 fields/sec	
Light Sensitivity	Lux	0.5Lux @ F2 5600ºK	
Signal to Noise Ratio	db	48	
Lens Field of View (FOV)	degrees	Select fixed board type lens from 9 to 90	
Focus		Fixed	
Iris		Automatic	

6.6 Reliability

Reliability	Units	Min	Max
Mean Time Between Failure	Hrs	80,000	

7 Maintenance & Fault Finding

7.1 Maintenance

Note: **The iCAM 100 does not require any active maintenance, if however the iCAM 100 enclosure is opened, it is necessary to ensure that the lid is replaced correctly and securely, otherwise the iCAM may not comply with the ATEX regulations.**

It is recommended that the iCAM 100 is regularly inspected for deterioration caused from wear and tear, accidental damage, rust, corrosion of chemicals etc. This is to ensure the integrity of the protection is maintained at the intended level of security from ignition in compliance with ATEX regulations.

7.2 Fault Finding

Symptoms	Cause	Corrective Action
No Video Picture	No Power Connection	Ensure that the power supply is connected properly
	No Video Signal	Ensure that the video output connections are connected properly
Video Picture Corrupted (Noise)	Video Signal Polarity Wrong	Ensure the video cables are connected to the correct video signals from the camera
	Poor Video Cabling	Ensure that the camera enclosure is connected to a clean earth Ensure that the cable screen is connected to a clean earth at the one end only (generally the video equipment/monitor) Ensure that all electrical connections and terminals are properly made-off and tight
	Interference	Ensure that the video signal cables are not run parallel to or mixed in with other high power/frequency signals Ensure that the video signal cabling does not run nearby any high power switching or transforming equipment
Video Picture Blurred	Camera Out Of Focus	Return to the manufacturer
	Camera Optics Fouled	Clean with a suitable optical glass cleaner or using weak solution of detergent and water
Video Picture Too Dark	Low Light Level	In dark or low light areas the video picture quality will reduce and the picture will become dark – consider installing conventional or Near-IR light sources

8 Type Codes

Compact Colour CCTV Camera				**iCAM100-[#1]-X-P-[#4]**
Specify Field of View [#1]				
Angle of View	**Focal Length**	**Recognition Distance**	**Best Picture**	
19°	16.0mm	30M	12	19
28°	12.0mm	16M	6	28
40°	8.0mm	12	4	40
53°	6.0mm	8M	2.3	53
80°	4.0mm	6M	2	80
92°	3.6mm	4M	1.8	92
130°	2.97mm	3.5M	1.5	130
Specify Cable Entries [#4]				
One M20 EEx de Cable Gland, Cable O/D range 3mm - 8mm				1
Two M20 EEx de Cable Gland, Cable O/D range 3mm - 8mm				2
Specify Accessories				
Wall mounting bracket with manual pan and tilt				iCAM100-WB

9 EC Declaration

EXTRONICS

Hazardous Area Specialists

EC Declaration of Conformity

Extronics Ltd, Meridian House, Roe street, Congleton, CW12 1PG UK

Declare under sole responsibility that the product;

iCAM100 - Flameproof Fixed Focus Camera Assembly iCAM100-X-X-X

Consisting of the following certified items:

TOCSIN 102 Camera Module Enclosure	ATEX II 2 GD EEx d IIC T6
Walsall Terminal Box Series GL	ATEX II 2 GD EEx e II T6
Peppers Type A2LF Cable Gland	ATEX II 2 GD EEx d IIC / EEx e II
Certification	**ATEX II 2 GD EEx de IIC T6**

To which this declaration relates is in accordance with the provision of the following directives

94/9/EC Equipment and protective systems intended for use in potentially explosive atmospheres.

04/108/EC CE Marking for Electromagnetic Compatibility Directive

06/95/EC Low Voltage Directive (LVD)

And is in conformity with the following standards or other nominative documents

EN50014:1997 + A1 &A2	Electrical apparatus for potentially explosive atmospheres – General requirements
EN60079-0:2006	Electrical apparatus for potentially explosive gas atmospheres – General requirements
EN60079-1:2004	Electrical apparatus for potentially explosive gas atmospheres – Flameproof enclosures 'd'
EN60079-7:2007	Electrical apparatus for explosive gas atmospheres – Increased safety 'e'
EN60079-14:2003	Electrical apparatus for potentially explosive atmospheres – Electrical installations in hazardous areas (other than mines)
EN61241-0:2006	Electrical apparatus for use in the presence of combustible dust – General requirements
EN61000-6-2:2005	Electromagnetic compatibility (EMC) - Generic standards - General standards - Immunity for industrial environments
EN61000-6-4:2007	Electromagnetic compatibility (EMC) - Generic standards - Emission standard for industrial environments
BS EN 61010-1:2001	Safety requirements for electrical equipment for measurement, control and laboratory use - Part 1: General requirements

Signed

Date: 04/05/10

Nick Saunders
Technical Services Manager

Extronics Ltd · Meridian House · Roe Street · Congleton · CW12 1PG · Tel +44 (0)1260 297274 Fax +44 (0)1260 297280 E-mail info@extronics.com Web www.extronics.com
Incorporated in England and Wales, Registration No. 3076287

10 ATEX Certificates

Junction box

sira
Certification Service

1 **EC TYPE-EXAMINATION CERTIFICATE**

2 Equipment intended for use in Potentially Explosive Atmospheres Directive 94/9/EC

3 Certificate Number: Sira 99ATEX3200

4 Equipment: E900 Series Junction Boxes

5 Applicant: Walsall Ltd

6 Address: Cornwallis Road
West Bromwich
West Midlands
B70 7DX
UK

7 This equipment and any acceptable variation thereto is specified in the schedule to this certificate and the documents therein referred to.

8 Sira Certification Service, notified body number 0518 in accordance with Article 9 of Directive 94/9/EC of 23 March 1994, certifies that this equipment has been found to comply with the Essential Health and Safety Requirements relating to the design and construction of equipment intended for use in potentially explosive atmospheres given in Annex II to the Directive.

The examination and test results are recorded in confidential report number R51X6419A and R52V11443A.

9 Compliance with the Essential Health and Safety Requirements, with the exception of those listed in the schedule to this certificate, has been assured by compliance with the following documents:

EN 50014:1997 (Amendments 1 and 2) EN 50019:1994 EN 50020:1994

10 If the sign 'X' is placed after the certificate number, it indicates that the equipment is subject to special conditions for safe use specified in the schedule to this certificate.

11 This EC type-examination certificate relates only to the design and construction of the specified equipment. If applicable, further requirements of this Directive apply to the manufacture and supply of this equipment.

12 The marking of the equipment shall include the following:

Ex II 2G EEx e II T6	Ex II 1G EEx ia IIC T6	Ex II 2GD EEx e II T6 IP66	Ex II 1GD EEx ia IIC T6 IP66

(Ta –50°C to +40°C)* or (Ta –50°C to +50°C)* or (Ta –40°C to +40°C) or (Ta –40°C to +50°C)
* Not applicable to equipment fitted with a metallised plastic label

Project Number 52V11443
Date 14 March 2000
Re-issued 30 April 2004
C. Index 04

C Ellaby
Certification Officer

This certificate and its schedules may only be reproduced in its entirety and without change

Sira Certification Service
Rake Lane, Eccleston, Chester, CH4 9JN, England
Tel: +44 (0) 1244 670900 Fax: +44 (0) 1244 681330
Email: exhazard@siratc.co.uk
Sira Certification Service is a service of Sira Test & Certification Ltd

Form 9176 Issue 10

sira
Certification Service

SCHEDULE

EC TYPE-EXAMINATION CERTIFICATE Sira 99ATEX3200

Re-issued 30 April 2004 to incorporate changes detailed in report number R53V11443A thereby incorporating previously issued variations 1 to 7.

13 **DESCRIPTION OF EQUIPMENT**

This certificate covers a range of glass fibre reinforced polyester Junction Boxes manufactured in six sizes. The boxes are component certified EEx e II, Sira Certificate Number Sira 00ATEX3028U refers.

The Junction Boxes may be fitted with any number of either suitably certified EEx 'e' or EEx 'ia' terminals up to the maximum number permitted by the physical constraints of the boxes, provided the rated maximum dissipated power is not exceeded and that the specific conditions of certification are satisfied.

The dissipated power in Watts for the enclosure is to be calculated in accordance with EN 50019:1994, Annex C,C.2. The table below contains the calculated maximum dissipated power rating for each junction box valid for a T6 temperature classification.

Enclosure Size	Enclosure Dimensions (mm)			Maximum power dissipation (W)	
	Height	Length	Width	Ta –50°C to +40°C	Ta –50°C to +50°C
1	90	122	120	9.4	3.5
2	91	160	160	10.4	4.3
3	91	260	160	12.0	5.0
4	91	360	160	13.8	6.2
5	120	255	250	15.5	6.4
6	120	405	400	31.4	11.2

When the category 1 intrinsically safe junction boxes are installed in the presence of combustible dust, their use is based upon a 12 mm layer of dust and a 50% reduction in the power rating; therefore these products are rated as follows:

Enclosure Size	Intrinsically Safe Power Limit (Watts)	
	T6 (-40°C or -50°C to +40°C)	T6 (-40°C or -50°C to +50°C)
1	4.7	1.75
2	5.2	2.15
3	6	2.5
4	6.9	3.1
5	7.75	3.2
6	15.7	5.6

Design Options

- The increased safety junction boxes may be fitted with a terminal board that is rated at 16 A and 550V.
- Up to six sockets may be fitted into the sides of the size 5 or size 6 junction boxes; this arrangement takes the form of one or two sockets on up to three of the available four sides of the junction box - the sockets are manufactured by Marechal, as detailed in clause 17.9.
- The junction boxes may be manufactured in alternative sizes.

Date 14 March 2000
Re-issued 30 April 2004

Sira Certification Service
Rake Lane, Eccleston, Chester, CH4 9JN, England
Tel: +44 (0) 1244 670900 Fax: +44 (0) 1244 681330
Email: exhazard@siratc.co.uk
Sira Certification Service is a service of Sira Test & Certification Ltd

Form 9176 Issue 10

sira
Certification Service

SCHEDULE

EC TYPE-EXAMINATION CERTIFICATE Sira 99ATEX3200

14 **DESCRIPTIVE DOCUMENTS**

14.1

Drawing No.	Sheet	Rev.	Date	Description
16B1252B	1 of 1	B	07 Dec 00	Alternative Suppliers of Material for Range of GRP Junction Boxes
16E008A	1 of 1	A	17 Jun 97	EEx e/EEx (ia) Enclosures/Junction Boxes (Polyester)
16B921A	1 of 1	A	15 Jun 98	Internal/External Earth Terminal Arrangement For Range Of Junction Boxes
B.0527.13.1041B	1 of 1	B	24 Feb 00	Certification Label For Increased Safety Enclosures – Steel & GRP
B.0527.13.1042B	1 of 1	B	24 Feb 00	Certification Label For Increased Safety Enclosures – Steel & GRP
16B1375	1 of 1	A	25 Jan 00	122 x 120 x 90 Nominal Size Junction Box Fitted With Terminal Board
16B1376	1 of 1	A	25 Jan 00	122 x 120 x 90 Nominal Size Junction Box Fitted With Terminal Board And Earth Continuity Plate
16B1377	1 of 1	-	23 Nov 99	Terminal Board For Ex e Junction Box
B.0527.13.1048	1 of 1	-	05 Dec 00	Warning Label for 900 Series Non-Carbon Loaded Enclosures
B0527-13-1049	1 of 1	0	08 Dec 00	Auxilary Label Detail
E900/NB/01	1 of 1	-	15 Jan 03	Enclosure – Size 1
E900/NB/02	1 of 1	-	15 Jan 03	Enclosure – Size 2
E900/NB/03	1 of 1	-	15 Jan 03	Enclosure – Size 3
E900/NB/04	1 of 1	-	15 Jan 03	Enclosure – Size 4
E900/NB/05	1 of 1	-	15 Jan 03	Enclosure – Size 5
E900/NB/06	1 of 1	-	15 Jan 03	Enclosure – Size 6
E900/NB/07	1 of 1	-	15 Jan 03	Earth Arrangements
E900/NB/08	1 of 1	A	22 Mar 04	EEx e Label
E900/NB/09	1 of 1	A	22 Mar 04	EEx ia Label
E900/NB/12	1 of 1	-	15 Jan 03	Enclosure – Size 1 – Fitted With Pillar Terminal Board
E900/NB/13	1 of 1	-	15 Jan 03	Enclosure – Size 1 – Fitted With Pillar Terminal Board And Earth Continuity Plate
E900/NB/14	1 of 1	-	15 Nov 03	Enclosures – Size 5 & 6 – Fitted With Up To Sockets

14.2 Report Nos. R51X6419A and R52V11443A

15 **SPECIAL CONDITIONS FOR SAFE USE** (denoted by X after the certificate number)

None

16 **ESSENTIAL HEALTH AND SAFETY REQUIREMENTS OF ANNEX II** (EHSRs)

The relevant EHSRs that are not addressed by the standards listed in this certificate have been identified and individually assessed in Report No. R51X6419A.

Date 14 March 2000
Re-issued 30 April 2004

Sira Certification Service
Rake Lane, Eccleston, Chester, CH4 9JN, England
Tel: +44 (0) 1244 670900 Fax: +44 (0) 1244 681330
Email: exhazard@siratc.co.uk
Sira Certification Service is a service of Sira Test & Certification Ltd

Form 9176 Issue 10

sira
Certification Service

SCHEDULE

EC TYPE-EXAMINATION CERTIFICATE Sira 99ATEX3200

17 **CONDITIONS OF CERTIFICATION**

17.1 The use of this certificate is subject to the Regulations Applicable to Holders of Sira Certificates.

17.2 Holders of EC type-examination certificates are required to comply with the production control requirements defined in Article 8 of directive 94/9/EC.

17.3 This certificate does not cover the terminals that may be fitted to the enclosure. All terminals fitted shall be suitably certified and installed in accordance with their certification requirements.

17.4 When the junction boxes are equipped by the manufacturer with terminals, a routine electric strength test shall be carried out only if the components are wired. This test shall be carried out according to the following standards:

- industrial control equipment: EN 60947
- measurement, control and laboratory use: EN 61010

17.5 For EEx e enclosures, a minimum of 8mm between terminals and the enclosure is required for voltages up to 550 V.

17.6 For Ex ia enclosures a minimum of 3 mm between the terminals and the enclosure is required. There shall be 6 mm between different I.S circuits within the enclosure, 50 mm is required between I.S circuits and non I.S. circuits.

17.7 The terminal board rated at 16 A and 550V shall only be fitted in the increased safety junction boxes.

17.8 All cable glands, breathers, drains and plugs/stoppers for unused cable entries shall be suitable for use with equipment that:

- is certified as group II category 2GD.
- has a minimum ingress protection of IP66.

17.9 This certificate relies on the following previously-certified products. When used as part of the E900 Series Junction Boxes, the key attributes listed in the table below shall still be maintained by their original certificate.

Description	Certificate No.	Key attributes
Marechal, DXN1 plug/socket 500 V, 20 A	LCIE 99 ATEX 6027 X	II 2GD, EEx e d IIC T6, IP66/IP67, T85°C
Marechal, DXN3 plug/socket 500 V, 20 A	LCIE 00 ATEX 6010 X	II 2GD, EEx e d IIC T6, IP66/IP67, T85°C
Marechal, DXN6 plug/socket 750 V, 20 A 550V 5A (auxiliary contacts)	LCIE 02 ATEX 6029 X	II 2GD, EEx e d IIC T6, IP66/IP67, T85°C

17.10 When the E900 Series Junction Boxes are fitted with the Marechal plug/sockets that are detailed in clause 17.9, the manufacturer shall take all reasonable steps to ensure that the user installs the equipment within the temperature range that is applicable to these sockets and complies with their special conditions for safe use.

Date 14 March 2000
Re-issued 30 April 2004

Sira Certification Service
Rake Lane, Eccleston, Chester, CH4 9JN, England
Tel: +44 (0) 1244 670900 Fax: +44 (0) 1244 681330
Email: exhazard@siratc.co.uk
Sira Certification Service is a service of Sira Test & Certification Ltd

Form 9176 Issue 10

sira
Certification Service

SCHEDULE

EC TYPE-EXAMINATION CERTIFICATE Sira 99ATEX3200

17.11 The maximum power rating of the Size 5 & Size 6 junction boxes are to be maintained between the rated ambient range of -40°C to +40°C; these are:

- Size 5 at 15.5W and Size 6 at 31.4W for EEx e Junction boxes
- Size 5 at 7.75W and Size 6 at 15.7W for EEx ia Junction boxes.

17.12 The wiring to the sockets shall be subjected to an electric strength test of 1000 V rms + 2 x rated voltage, but with a minimum of 1500V, for at least 60 s and no more than 63 s as required by clause 7.1 of EN 50019: 1994. Alternatively, the test can be made at 1.2 times this value for between 3 and 5 seconds.

17.13 When the junction boxes are manufactured in alternative sizes; any given dimension shall not be larger than the respective dimension of the largest enclosure or smaller than the respective dimension of the smallest enclosure. The power rating applied to a junction box of intermediate size shall be that of the next smallest enclosure.

Date 14 March 2000
Re-issued 30 April 2004

Sira Certification Service
Rake Lane, Eccleston, Chester, CH4 9JN, England
Tel: +44 (0) 1244 670900 Fax: +44 (0) 1244 681330
Email: exhazard@siratc.co.uk
Sira Certification Service is a service of Sira Test & Certification Ltd

Form 9176 Issue 10

sira
Certification Service

EC TYPE-EXAMINATION CERTIFICATE VARIATION

CERTIFICATE NUMBER Sira 99ATEX3200 Dated 14 March 2000
Re-issued 30 April 2004

VARIATION NUMBER 1 (ONE) Dated 26 November 2004

VARIATION TO EQUIPMENT

To include:

1 The introduction of the following, additional enclosure sizes:

Size	Length (mm)	Width (mm)	Height (mm)	Power rating (Ta max 40°C)	Power rating (Ta max =55°C)
10	80	75	55	7.5 W	1.6 W
20	110	75	55	8.0 W	2.0 W
30	160	75	55	9.0 W	3.0 W

DESCRIPTIVE DOCUMENTS

Drawing No.	Sheet	Rev.	Date	Description
E900/NB/01A	1 of 1	A	17 Nov 04	E900 Range junction boxes
E900/NB/08	1 of 1	B	16 Nov 04	E900 Certification label
E900/NB/09B	1 of 1	B	16 Nov 04	Certification label for i.s. junction boxes

ADDITIONAL CONDITIONS OF CERTIFICATION

None

File No. 53A11891

Report No. R53A11891V

C Ellaby
Certification Officer

This Variation and its schedules may only be reproduced in its entirety and without change

Page 1 of 1

Sira Certification Service
Rake Lane, Eccleston, Chester, CH4 9JN, England
Tel: +44 (0) 1244 670900 Fax: +44 (0) 1244 681330
Email: exhazard@siratc.co.uk
Sira Certification Service is a service of Sira Test & Certification Ltd

ST&C (Chester) Form 9206 Issue 1

sira
Certification Service

EC TYPE-EXAMINATION CERTIFICATE VARIATION

CERTIFICATE NUMBER	Sira 99ATEX3200	Dated Re-issued	14 March 2000 30 April 2004
VARIATION NUMBER	2 (TWO)	Dated	7 January 2005

VARIATION TO EQUIPMENT

To include:

1 The introduction of an alternative earth continuity arrangement.

DESCRIPTIVE DOCUMENTS

Drawing No.	Sheet	Rev.	Date	Description
E900/NB/22	1 of 1	A	08 Dec 04	Alternative Earth Continuity Plate Assembly

ADDITIONAL CONDITIONS OF CERTIFICATION

None

File No. 53A12151

Report No. R53A12151A

C Ellaby
Certification Officer

This Variation and its schedules may only be reproduced in its entirety and without change

Page 1 of 1

Sira Certification Service
Rake Lane, Eccleston, Chester, CH4 9JN, England
Tel: +44 (0) 1244 670900 Fax: +44 (0) 1244 681330
Email: exhazard@siratc.co.uk
Sira Certification Service is a service of Sira Test & Certification Ltd

ST&C (Chester) Form 9206 Issue 1

sira
Certification Service

EC TYPE-EXAMINATION CERTIFICATE VARIATION

CERTIFICATE NUMBER	Sira 99ATEX3200	Dated Re-issued	14 March 2000 30 April 2004
VARIATION NUMBER	3 (THREE)	Dated	24 May 2005

VARIATION TO EQUIPMENT

To include:

1 The addition of 'EEx e' ammeters component certified as Sira 02ATEX3380U, 'EEx me' indicator lamps component certified as Sira 04ATEX5056U and 'EEx de' rotary switches and push buttons component certified as Sira 03ATEX1269U; the following new markings are introduced:

EEx e II T5 (Ta = -40°C to +50°C)
EEx em II T6 (Ta –40°C to +40°C)
EEx edm IIC T6 (Ta –40°C to +40°C)
EEx ed II T6 (Ta = -40°C to +40°C)
EEx ed II T5 (Ta = -40°C to +50°C)

DESCRIPTIVE DOCUMENTS

Drawing No.	Sheet	Rev.	Date	Description
E900/NB/18	1 of 1	A	01/03/05	Enclosure with Meter Window
E900/NB/19	1 of 1	A	01/03/05	Enclosure with Indictor Lamp
E900/NB/20	1 of 1	A	01/03/05	Enclosure with Push Button(s)
E900/NB/21	1 of 1	A	01/03/05	Enclosure with Position Switch
E900/NB/23	1 of 1	-	02/03/05	E900 Fitted with Components

ADDITIONAL CONDITION OF CERTIFICATION

None

File No. 53A11745

Report No. R53A11745A

C Ellaby
Certification Officer

This Variation and its schedules may only be reproduced in its entirety and without change

Page 1 of 1

ST&C (Chester) Form 9206 Issue 1

Sira Certification Service
Rake Lane, Eccleston, Chester, CH4 9JN, England
Tel: +44 (0) 1244 670900 Fax: +44 (0) 1244 681330
Email: exhaszard@sira.co.uk
Sira Certification Service is a service of Sira Test & Certification Ltd

Camera Module

sira
CERTIFICATION

1 **EC TYPE-EXAMINATION CERTIFICATE**

2 Equipment intended for use in Potentially Explosive Atmospheres Directive 94/9/EC

3 Certificate Number: Sira 06ATEX1366X

4 Equipment: TOCSIN 102 Series Enclosure

5 Applicant: Extronics Limited

6 Address: Meridian House
Roe street
Congleton
Cheshire
CW12 1PG
UK

7 This equipment and any acceptable variation thereto is specified in the schedule to this certificate and the documents therein referred to.

8 Sira Certification Service, notified body number 0518 in accordance with Article 9 of Directive 94/9/EC of 23 March 1994, certifies that this equipment has been found to comply with the Essential Health and Safety Requirements relating to the design and construction of equipment intended for use in potentially explosive atmospheres given in Annex II to the Directive.

The examination and test results are recorded in confidential report number R51A15846A.

9 Compliance with the Essential Health and Safety Requirements, with the exception of those listed in the schedule to this certificate, has been assured by compliance with the following documents:

EN 50014:1997 (amendments A1 & A2)
EN 50018:2000
EN 50281-1-1:1998

10 If the sign 'X' is placed after the certificate number, it indicates that the equipment is subject to special conditions for safe use specified in the schedule to this certificate.

11 This EC type-examination certificate relates only to the design and construction of the specified equipment. If applicable, further requirements of this Directive apply to the manufacture and supply of this equipment.

12 The marking of the equipment shall include the following:

II 2 G D
EEx d IIC T6

Project Number 51A15846
Date 17 January 2007
C. Index 14

This certificate and its schedules may only be reproduced in its entirety and without change

ST&C(Chester) Form 9225 Issue 4

Page 1 of 2

C Ellaby
Certification Officer
Sira Certification Service
Rake Lane, Eccleston, Chester, CH4 9JN, England

Tel: +44 (0) 1244 670900
Fax: +44 (0) 1244 681330
Email: info@siracertification.com
Web: www.siracertification.com

sira CERTIFICATION

SCHEDULE

EC TYPE-EXAMINATION CERTIFICATE Sira 06ATEX1366X

13 **DESCRIPTION OF EQUIPMENT**

The TOCSIN 102 Series Enclosure can be used to form either:

- a TOCSIN 102 Optical Assembly, maximum power dissipation 6 W; this unit utilises a glass window insert and is fitted with an optical unit e.g. camera.
- a TOCSIN 102 Gas Detector Assembly, maximum power dissipation 2 W; this unit utilises a sintered element insert and is fitted with a gas sensor.

The TOCSIN 102 Hazardous Area CCTV Camera Module consists of stainless steel body and insert. These two items are retained by a circlip and connected by a threaded flamepath. Whilst the body is a generic item, there are two types of insert; one incorporates a glass window (102 Optical Assembly) and the other a sintered element (102 Gas Detector Assembly). Both the glass window and sintered element are cemented in position (Devweld 531). The window is also fitted with a backing ring and circlip.

The rear of the body incorporates a cemented (Araldite CW1404 GB/HY1456 GB) bushing assembly. This allows the passage of permanently connected cable from inside to outside the enclosure. The permanently connected cable will be terminated in a suitably selected and certified enclosure.

14 **DESCRIPTIVE DOCUMENTS**

14.1

Drawing No.	**Issue**	**Sheet**	**Date** (Sira Stamp)	**Title**
3449703	1	1 of 1	22 Nov 06	T102 Engraving Detail 'EXTRONICS'

14.2 Report number R51A15846A.

14.3 Certificate number Sira 02ATEX1271X dated 14 March 2003.

15 **SPECIAL CONDITIONS FOR SAFE USE** (denoted by X after the certificate number)

15.1 The free end of the permanently connected cable shall be protected in accordance with EN 50014:1997 clause 14.1.

15.2 In accordance with EN 50018:2000 clause 13.4.2 the rear end of bushing shall be protected by fitting it into a suitably certified enclosure. In addition, the bushing must not be subject to torque during installation.

15.3 The product shall not be connected to portable equipment.

15.4 The product that is fitted with a window has only been subjected to reduced risk impact tests in accordance with EN 50014:1997 clause 23.4.3.1; therefore it shall not be mounted in an area where there is a high risk of impact.

15.5 The product shall be earthed in accordance with EN 50014:1997 clause 15 when fitted to a suitably certified enclosure.

16 **ESSENTIAL HEALTH AND SAFETY REQUIREMENTS OF ANNEX II** (EHSRs)

The relevant EHSRs that are not addressed by the standards listed in this certificate have been identified and individually assessed in report number R51A15846A.

17 **CONDITIONS OF CERTIFICATION**

17.1 The use of this certificate is subject to the Regulations Applicable to Holders of Sira Certificates.

17.2 Holders of EC type-examination certificates are required to comply with the production control requirements defined in Article 8 of directive 94/9/EC.

17.3 This product shall be uniquely marked with the label identified in section 14.1 of this certificate.

Date 17 January 2007

Sira Certification Service
Rake Lane, Eccleston, Chester, CH4 9JN, England

Tel: +44 (0) 1244 670900
Fax: +44 (0) 1244 681330
Email: info@siracertification.com
Web: www.siracertification.com

Cable Gland

sira
Certification Service

1 **EC TYPE-EXAMINATION CERTIFICATE**

2 Equipment intended for use in Potentially Explosive Atmospheres Directive 94/9/EC

3 Certificate Number: Sira 01ATEX1272X

4 Equipment: Type A2LF range of cable glands

5 Applicant: Peppers Cable Glands Ltd

6 Address: Stanhope Road
Camberley
Surrey
GU15 3BT

7 This equipment and any acceptable variation thereto is specified in the schedule to this certificate and the documents therein referred to.

8 Sira Certification Service, notified body number 0518 in accordance with Article 9 of Directive 94/9/EC of 23 March 1994, certifies that this equipment has been found to comply with the Essential Health and Safety Requirements relating to the design and construction of equipment intended for use in potentially explosive atmospheres given in Annex II to the Directive.

The examination and test results are recorded in confidential report number R53A8374B.

9 Compliance with the Essential Health and Safety Requirements, with the exception of those listed in the schedule to this certificate, has been assured by compliance with the following documents:

EN 50014 : 1997 + amendment A1 and A2
EN 50018 : 2000
EN 50019 : 2000
EN 50281-1-1 : 1998

10 If the sign 'X' is placed after the certificate number, it indicates that the equipment is subject to special conditions for safe use specified in the schedule to this certificate.

11 This EC type-examination certificate relates only to the design and construction of the specified equipment. If applicable, further requirements of this Directive apply to the manufacture and supply of this equipment.

12 The marking of the equipment shall include the following:

II 2 G D
EEx d IIC/EEx e II

Project Number	53A9551
Date	20 December 2001
Re-Issued	17 December 2002
C. Index	07

C Ellaby
Certification Officer

Sira Certification Service
Rake Lane, Eccleston, Chester, CH4 9JN, England
Tel: +44 (0) 1244 670900 Fax: +44 (0) 1244 681330
Email: exhazard@siratc.co.uk
Sira Certification Service is a service of Sira Test & Certification Ltd

ST&C(Chester) Form 9176 Issue 6

sira
Certification Service

SCHEDULE

EC TYPE-EXAMINATION CERTIFICATE Sira 01ATEX1272X

Re-issued 17 December 2002
To permit report number R53A8374B to replace report number R53A8374A.

13 **DESCRIPTION OF EQUIPMENT**

The type A2LF range of cable glands is intended for use with any cable type where sealing and retention is required by gripping the outer sheath (this includes armoured/screened/braided cables, the armour/screen/braid being clamped inside the terminating equipment). Construction materials are brass, mild steel, stainless steel or aluminium alloy. Glands are available in a single or double seal configuration and utilise a silicone or neoprene seal. The single seal configuration is available with a compression nut, which will accept either male or female conduit.

Glands are available in the size range 16 to 100 mm with ISO metric entry threads of M20 to M100 respectively. Alternative thread forms are available.

14 **DESCRIPTIVE DOCUMENTS**

14.1

Drawing	Rev	Sheet	Date	Title
PCG/ATX/A2L	1	1 of 1	20 Nov 01	ATEX Range Glands for unarmoured cable A2LF, A2LCMF, A2LCFF & A2LDSF Families
PCG/ATX/91V	1	1 of 1	09 Mar 01	ATEX Component Skid Washer – Parts 91V, 91VB, 91VBT
PCG/ETDMV	1	1 of 1	20 Sep 01	Standard thread chart ATEX certified cable glands using "M", "V" & "N" components
PCG/MATS/AL	1	1 of 1	05 Nov 01	Standard materials AL. Alloy ATEX certified plands using "M", "V" and "N" components
PCG/MATS/SB	1	1 of 1	20 Sep 01	Standard materials ATEX certified glands using "M", "V" and "N" components
PCG/ATX/81N	1	1 of 1	23 Nov 01	ATEX component entry body Part 81N
PCG/ATX/82N	1	1 of 1	26 Feb 01	ATEX component seals 82N & 82NS
PCG/ATX/82V	1	1 of 1	19 Sep 01	ATEX component seal parts 82V, 82VS
PCG/ATX/85N	1	1 of 1	06 Nov 01	ATEX component mid cap part 85N
PCG/ATX/88N	1	1 of 1	05 Nov 01	ATEX component nut part 88N
PCG/ATX/88NF	1	1 of 1	06 Nov 01	ATEX component conduit nut female part 88NF
PCG/ATX/88NM	1	1 of 1	05 Nov 01	ATEX component conduit nut, male part 88NM
PCG/ATX/91N	1	1 of 1	09 Mar 01	ATEX component skid washer – parts 91N, 91NB, 91NBT

14.2 Report No. R53A8374B

Date 20 December 2001
Re-issued 17 December 2002

Sira Certification Service
Rake Lane, Eccleston, Chester, CH4 9JN, England
Tel: +44 (0) 1244 670900 Fax: +44 (0) 1244 681330
Email: exhazard@siralc.co.uk
Sira Certification Service is a service of Sira Test & Certification Ltd

ST&C(Chester) Form 9176 Issue 6

sira
Certification Service

SCHEDULE

EC TYPE-EXAMINATION CERTIFICATE Sira 01ATEX1272X

15 **SPECIAL CONDITIONS FOR SAFE USE** (denoted by X after the certificate number)

15.1 The A2LF range of cable glands shall not be used with EEx d IIC enclosures with a volume greater than 2000 cm^3.

15.2 The A2LF range of cable glands shall not be used in enclosures where the temperature at the point of entry/mounting exceeds the following:

-20°C to +80°C for the Neoprene seal variants
-60°C to +180°C for the Silicone seal variants

15.2 The cable entries are only suitable for fixed installations. Cables must be effectively clamped to prevent pulling or twisting.

16 **ESSENTIAL HEALTH AND SAFETY REQUIREMENTS OF ANNEX II** (EHSRs)

The relevant EHSRs that are not addressed by the standards listed in this certificate have been identified and individually assessed in Report No. RS3A8374B.

17 **CONDITIONS OF CERTIFICATION**

17.1 The use of this certificate is subject to the Regulations Applicable to Holders of SCS Certificates.

17.2 Holders of EC type-examination certificates are required to comply with the production control requirements defined in Article 8 of directive 94/9/EC.

Date 20 December 2001
Re-issued 17 December 2002

Sira Certification Service
Rake Lane, Eccleston, Chester, CH4 9JN, England
Tel: +44 (0) 1244 670900 Fax: +44 (0) 1244 681330
Email: exhazard@siratc.co.uk
Sira Certification Service is a service of Sira Test & Certification Ltd

ST&C(Chester) Form 9176 Issue 6

sira
Certification Service

EC TYPE-EXAMINATION CERTIFICATE VARIATION

CERTIFICATE NUMBER	Sira 01ATEX1272X	Dated Re-issued	20 December 2001 17 December 2002
VARIATION NUMBER	1 (ONE)	Dated	17 December 2002

VARIATION TO EQUIPMENT

To permit:

1 The batch number shown in the actual product marking to be removed.

2 The recognition of a number of minor, dimensional design changes.

DESCRIPTIVE DOCUMENTS - 1

Number	Sheet	Rev	Date	Description
PCG/ATX/A2L	1 of 1	2	19 Aug 02	ATEX Range Glands for unarmoured cable A2LF, A2LCMF, A2LCFF & A2LDSF Families

DESCRIPTIVE DOCUMENTS – 2

Number	Sheet	Rev	Date	Description
PCG/ATX/81N	1 of 1	2	6 Sep 02	ATEX component entry body Part 81N
PCG/ATX/85N	1 of 1	2	9 Sep 02	ATEX component mid cap part 85N
PCG/ATX/88N	1 of 1	2	6 Sep 02	ATEX component nut part 88N
PCG/ATX/88NF	1 of 1	2	6 Sep 02	ATEX component conduit nut female part 88NF
PCG/ATX/88NM	1 of 1	2	6 Sep 02	ATEX component conduit nut, male part 88NM

ADDITIONAL CONDITIONS OF CERTIFICATION

None

File No 53A9551

Report No. NA

C Ellaby
Certification Officer

Sira Certification Service
Rake Lane, Eccleston, Chester, CH4 9JN, England
Tel: +44 (0) 1244 670900 Fax: +44 (0) 1244 681330
Email: exhazard@siratc.co.uk
Sira Certification Service is a service of Sira Test & Certification Ltd

ST&C (Chester) Form 9206 Issue 1

sira
Certification Service

EC TYPE-EXAMINATION CERTIFICATE VARIATION

CERTIFICATE NUMBER	Sira 01ATEX1272X	Dated Re-issued	20 December 2001 17 December 2002
VARIATION NUMBER	2 (TWO)	Dated	31 March 2005

VARIATION TO EQUIPMENT

To permit:

1 The A2LF Range of Cable Glands to be marked IP68; this indicates that they have been tested at a depth up to 25 m for a duration of 30 mins when fitted into either threaded entries or 'EEx e' enclosures that have plain hole entries with 0.5 mm clearances.

2 The extension of the upper ambient service temperature limit to +85°C for cable glands that incorporate neoprene seals (60° IRHO).

3 The use of Nitrile Butyle Rubber (NBR) O-ring interface seals with the A2LF Range of Cable Glands fitted with neoprene sealing rings.

4 Inclusion of a new size, 16 in all types, cable gland that has either neoprene or silicone sealing rings.

5 The modification of the mid cap component.

6 The introduction of minor drawing changes.

DESCRIPTIVE DOCUMENTS

Number	Sheet	Rev	Date	Description
PCG/ATX/A2L	1 of 1	3	09 Dec 04	ATEX Range Glands for unarmoured cable A2LF, A2LCMF, A2LCFF & A2LDSF Families
PCG/ATX/81N	1 of 1	3	26 Jan 04	ATEX component entry body Part 81N
PCG/ATX/85N	1 of 1	3	23 Jan 04	ATEX component mid cap part 85N
PCG/ATX/88N	1 of 1	3	23 Jan 04	ATEX component nut part 88N
PCG/ATX/88NF	1 of 1	3	09 Dec 04	ATEX component conduit nut female part 88NF
PCG/ATX/88NM	1 of 1	3	09 Dec 04	ATEX component conduit nut, male part 88NM
PCG/ATX/91V	1 of 1	2	11 Dec 03	Skid washer- parts 91V, 91VB, 91VBT
PCG/ATX/82V	1 of 1	3	10 Dec 03	Seals - parts 82V, 82VS
PCG/OR	1 of 1	1	17 Sep 01	Accessory component O-ring Seal

AMENDED SPECIAL CONDITION FOR SAFE USE

15.2 The A2LF Range of Cable Glands shall not be used in enclosures where the temperature at the point of entry/mounting exceeds the following:

-20°C to +85°C for the Neoprene (black) seal variants
-60°C to +180°C for the Silicone (white) seal variants

File No 51A11551

Report No. R51A11551A

C Ellaby
Certification Officer

This Variation and its schedules may only be reproduced in its entirety and without change

Page 1 of 1

ST&C (Chester) Form 9206 Issue 1

Sira Certification Service
Rake Lane, Eccleston, Chester, CH4 9JN, England
Tel: +44 (0) 1244 670900 Fax: +44 (0) 1244 681330
Email: exhazard@sira.co.uk
Sira Certification Service is a service of Sira Test & Certification Ltd

11 Manual Revision

Revision	Description	Date	By
11	Changed manual to new format	23/10/07	James Eastwood
12	Changed technical information	13/03/08	James Eastwood
13	Updated ATEX Certificate on Camera Module	02/05/08	James Eastwood
14	Amended ordering information	21/05/08	James Eastwood
15	Removed NTSC Option	09/07/09	James Eastwood
16	Changed Cable Gland Type	04/05/10	James Eastwood

Nick Saunders

Digitally signed by Nick Saunders
DN: CN = Nick Saunders, C = US
Reason: I have reviewed this document
Date: 2010.05.04 13:45:42 +01'00'